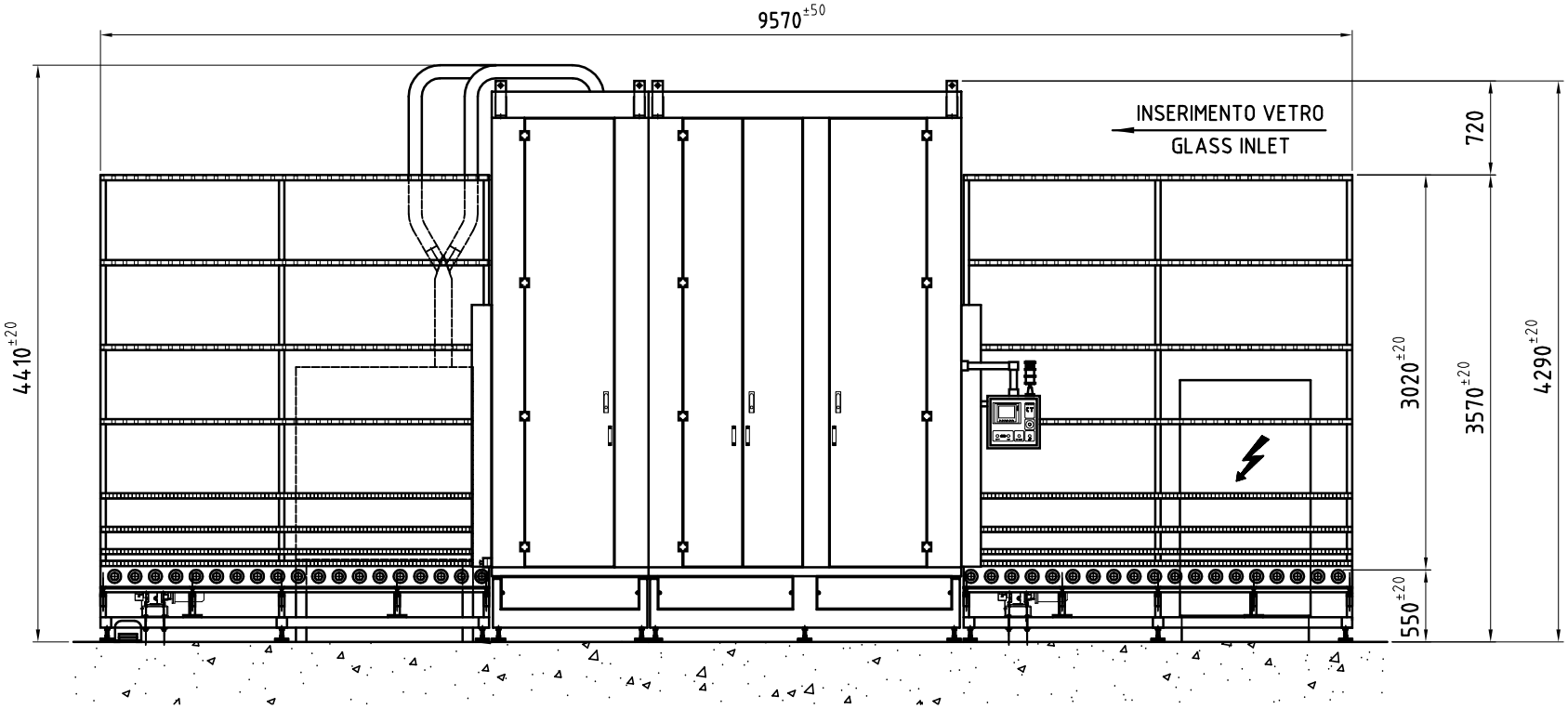

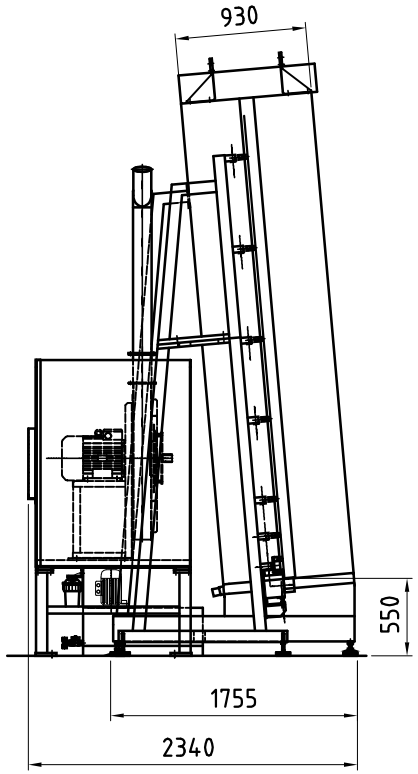

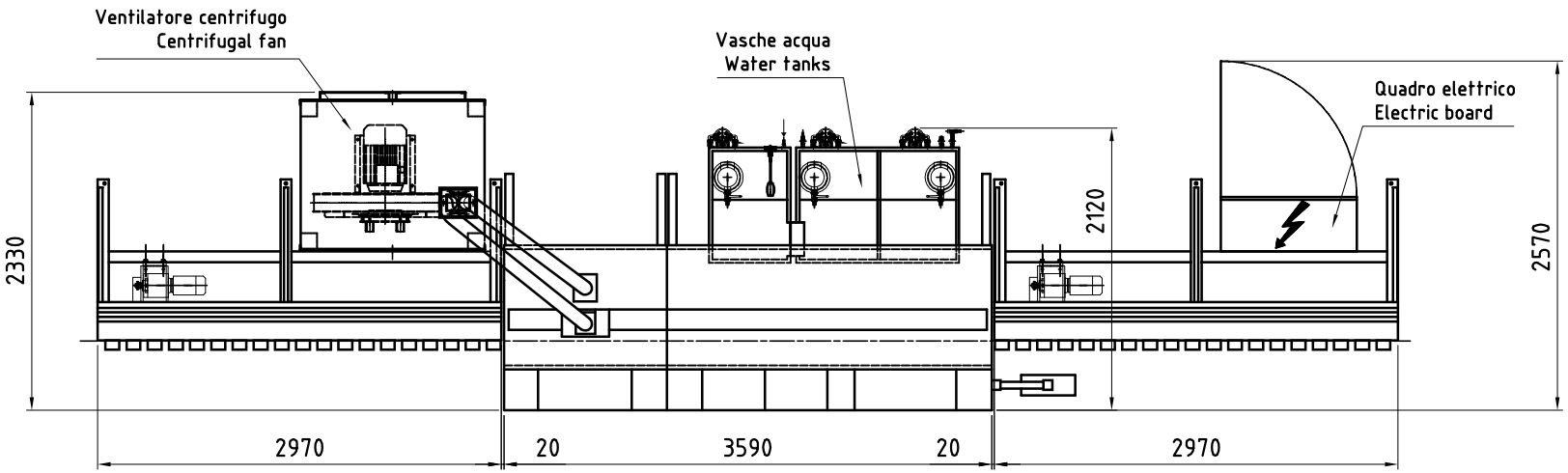

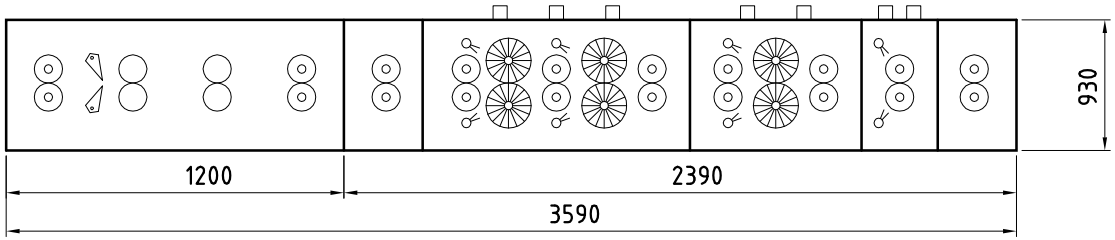

CTS 3300/1000/6S

ADELIO LATTUADA

CARBONATE- ITALY

COD.DIS.93060215A